Performance-PCs.com

1701 R. J. Conlan Blvd.
NE, Unit #5
Palm Bay, FL 32905, USA

Toll Free: 888-381-8222

www.performance-pcs.com
sales@performance-pcs.com

Like Us Facebook

See Our Instagram

Follow Us Twitter

Watch Our YouTube

EK-Quantum Vector Trinity RTX 3080/3090 Active Backplate D-RGB - Plexi

Special Price
$104.38 was
$157.99

Product Images

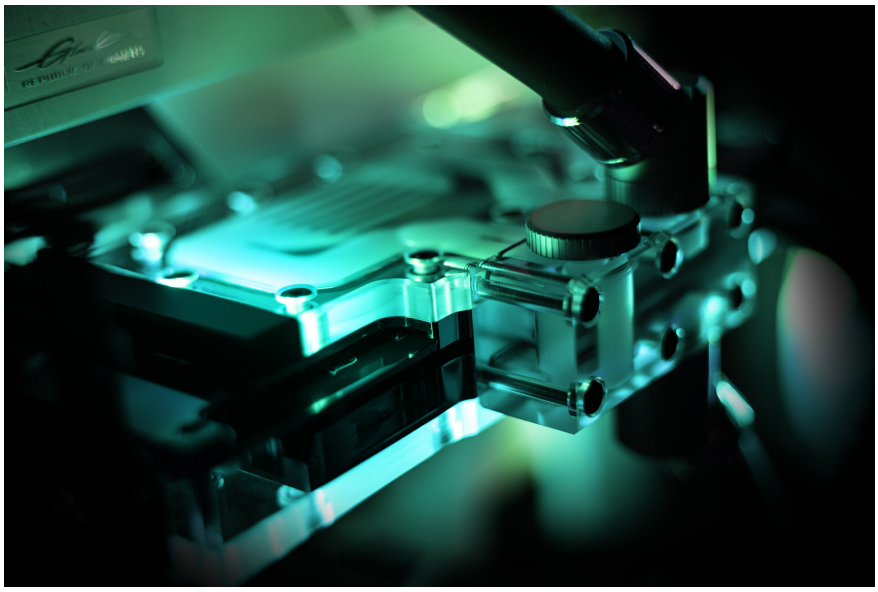

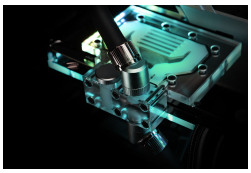

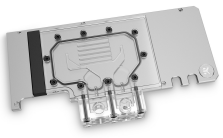

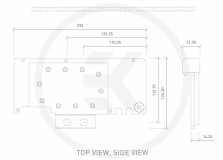

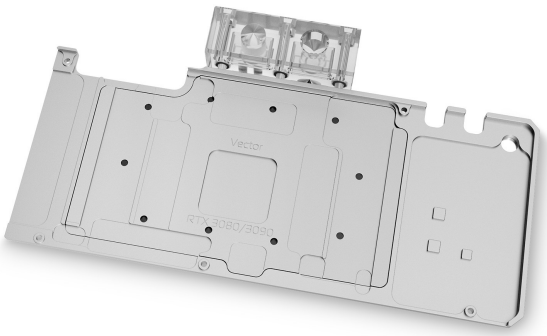

Short Description

EK-Quantum Vector Trinity RTX 3080/3090 Active Backplate D-RGB - Plexi is a cutting-edge addition to the EK® Quantum Line. It is made to complement the existing EK-Quantum Vector Trinity RTX 3080/3090 water blocks and actively cool the backside of all ZOTAC® GeForce RTX™ 3080 and 3090 Trinity GPU.

Description

EK-Quantum Vector Trinity RTX 3080/3090 Active Backplate D-RGB - Plexi is a cutting-edge addition to the EK® Quantum Line. It is made to complement the existing EK-Quantum Vector Trinity RTX 3080/3090 water blocks and actively cool the backside of all ZOTAC® GeForce RTX™ 3080 and 3090 Trinity GPU.

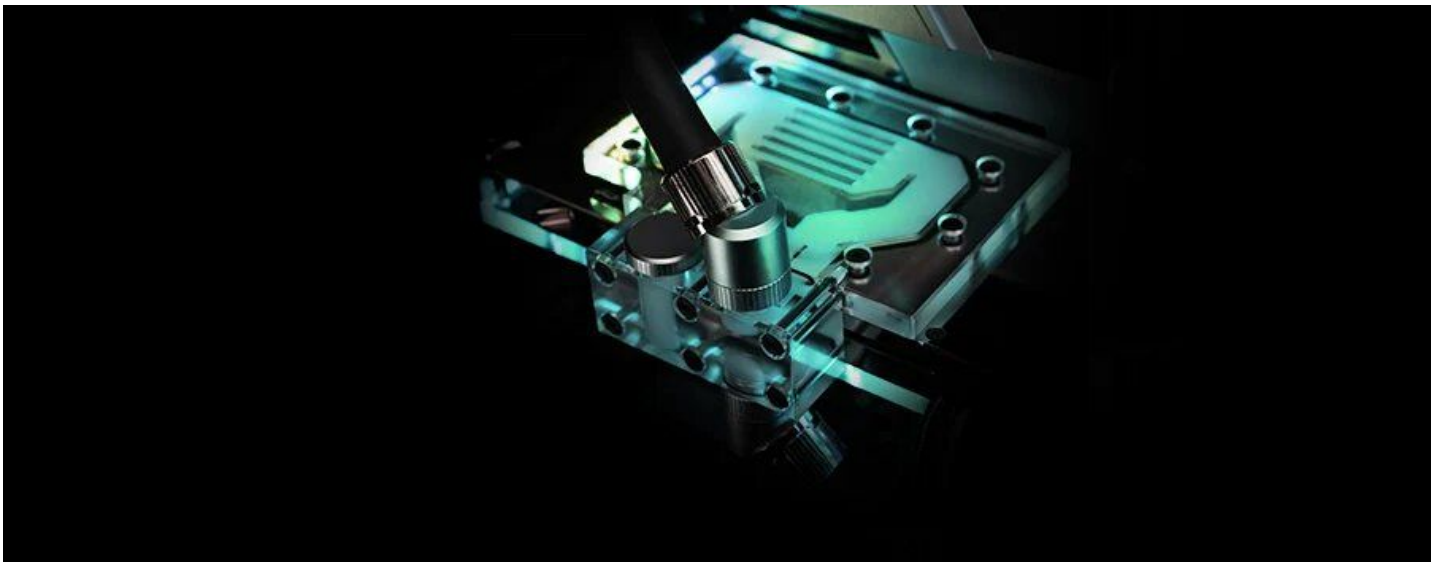

EK-Quantum Vector Trinity RTX 3080/3090 Active Backplate

EK-Quantum Vector Trinity RTX 3080/3090 active backplate links the water block and the active backplate part with a new terminal, which replaces the stock terminal coming with your water block. This way the whole enclosure requires only one inlet and one outlet, removing any unneeded additional tubing and reducing

clutter. It is the ultimate aesthetic and performance solution that finds your GPU sandwiched between two water blocks allowing maximum cooling.

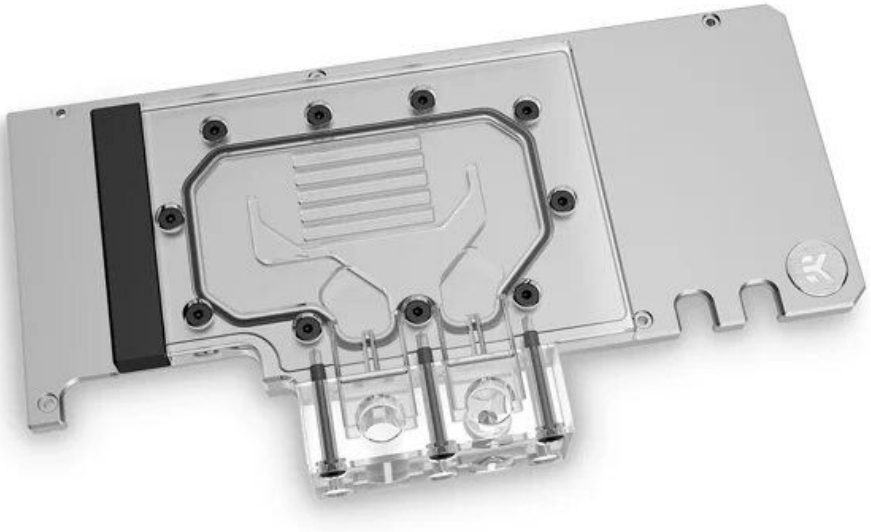

The Vector Active Backplate directly cools the PCB hotspots that are found on the backside of the GPU core and the VRM (voltage regulation module). On the RX 3090, the VRAM located on the backside is cooled, while the RTX 3080 gets cooling for the PCB located around the front-mounted VRAM. Cooling liquid is channeled over all these critical areas.

These newly developed active backplates feature a fin array with 6 wide channels allowing for very low flow restriction. This in turn allows overall lower temperatures, while the active backplate gets more than sufficient surface area for heat transfer.

The base of the active backplate is CNC-machined out of nickel-plated electrolytic copper, while its top is CNC-machined out of glass-like cast Acrylic. The rest of the backplate is made of nickel-plated aluminum and it does not come in contact with the liquid. These Vector Active Backplates also feature acrylic terminals that match the top cover. The watertight sealing is ensured by high-quality EPDM O-rings.

D-RGB lighting on EK-Quantum Vector Trinity RTX 3080/3090 Active Backplate D-RGB water block

The aesthetic end-piece is housing the addressable D-RGB LED strip. This water block boasts a total of 8 individually addressable RGB LEDs, and it is compatible with popular RGB sync technologies from all major motherboard manufacturers. The arrow marking on the 3-pin D-RGB LED connector is to be aligned with the +5V marking on the D-RGB (addressable) header.

PLEASE NOTE:

- This block is made for ZOTAC Trinity 3080 and 3090 cards. It is not a stand-alone unit and requires an EK-Quantum Vector Trinity RTX 3080/3090 water block to pair with.
- Due to the immense variety of fittings/barbs available on the market, we guarantee compatibility only with EK fittings.
- This product should NOT be installed with any aluminum Fluid Gaming parts!
- The use of specifically engineered coolants that contain corrosion, scale, and biological inhibitors is mandatory to prevent damage to your nickel plated water block! EK is offering a selection of such products in the coolants section.

Features

Enclosed:

- EK-Quantum Vector Trinity RTX 3080/3090 Active Backplate D-RGB - Plexi
- Necessary mounting screws, nuts, and washers
- 1x Nickel plated brass plug G1/4”
- EK-Loop Multi Allen Key (6mm, 8mm, 9mm)
- Thermal pads

Specifications

Technical Specification:

- Dimensions: (LxHxW) - 231x124x15mm
- D-RGB cable length: 500mm
- D-RGB LED count: 8
- D-RGB connector standard 3-pin (+5V, Data, Blocked, Ground)

Made in Slovenia - Europe!

Additional Information

Brand	EK Waterblocks
SKU	EK-TRIN-RTX-30803090-BP-DRGB-PL-D
Weight	3.5000
Color	Silver
Vga	Zotac® Trinity RTX 3080 AND 3090
Block GPU Type	Nvidia
Vendor SKU/EAN	3831109836316
Special Price	$104.38