Performance-PCs.com

1701 R. J. Conlan Blvd.
NE, Unit #5
Palm Bay, FL 32905, USA

Toll Free: 888-381-8222

www.performance-pcs.com
sales@performance-pcs.com

Like Us Facebook

See Our Instagram

Follow Us Twitter

Watch Our YouTube

Barrow LRC2.0 Active Backplate for ASUS STRIX 3090 Aurora

Special Price
$49.96 was
$89.95

Product Images

Short Description

Barrow LRC2.0 Active Backplate for ASUS STRIX 3090 Aurora

Description

Back RAM Water Block

Designed for 30 series GPU, it effectively overcomes the high temperature of GDDR6X memory on the back of the GPU and other issues. By water circulation cooling method, it effectively reduce the working temperature of RAM.

GPU water-cooled backboard is an optional sales accessories which functions with the water block.

Lightweight design avoiding overwload

Reduced the unnecessary coverage area and the weight of the water block, the water-cooled backboard covers the high calorific area including the RAM on its back, alleviating the heavy load on the GPU.

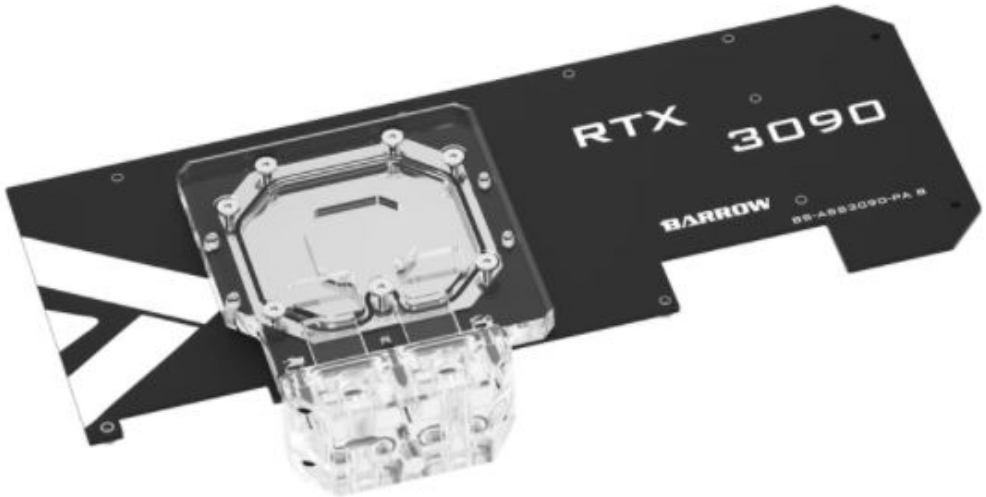

GPU water-cooled backboard is an optional sales accessories which functions with the water block.

Features

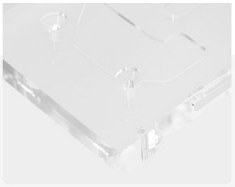

Original imported high-transparency acrylic board

High-temperature-resistant and high-transparency imported acrylic raw materials have higher transparency, longer life, no color change, no cracking, and emitting full of internal brilliant lighting effects.

High-density jet microchannel

The enlarged area of water passage has as many as 43 micro-channels, each with bottom-clearing slots and 5+3 (0.5MM groove width + 0.3MM interval) asymmetric water channels. The contact area between the water-cooling liquid and the soleplate is increased, as well as the heat dissipation efficiency of the cold head is enhanced.

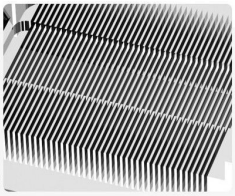

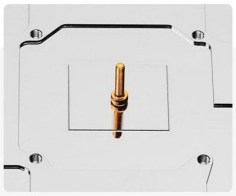

Copper-nickel plated mount

As the main material of the soleplate, copper with thermal conductivity which is less than silver, has high heat absorption and heat transfer efficiency. The surface adopts the mirror nickel plating process, which can effectively prevent the soleplate from oxidation and increase the service life.

Appearance patent bridgehead

Patent No.: 201630426O188

Unique appearance design, plus translucent logo makes the lighting effect more gorgeous.

Lighting effects show

Version 2.0 lamp belts and lamp beads can produce asynchronous static and dynamic lighting effects, that is, each lamp bead can independently change color in the same period. The built-in removable RGB light components can replace the light components according to the actual needs.

Control system 2.0

LRC full-color RGB lighting control system 2.0 includes BARROW' s version 2.0 manual controller and 16 channel remote controller. It can be compatible with the RGB lighting components and other independent products as well as built-in lighting components of all BARROW's 2.0 versions.

Compatible motherboard programmable ARGB light interface

Motherboard with 5V programmable ARGB pin can be connected via adapter ZBDZJX-5

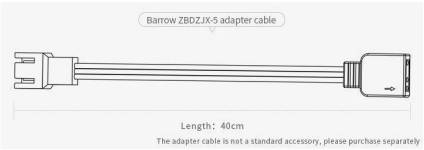

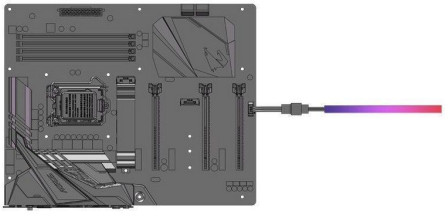

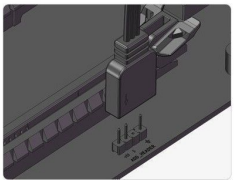

The 5V ARGB adapter cable should be connected to the corresponding motherboard interface in the corresponding direction

The ZBDZJX-5 adapter cable can only be connected to the motherboard 5V 3-pin ARGB lighting interface

Specifications

Installation method for water-cooled backboard

The installation examples are general instructions, and the installation methods of different graphics cards are slightly different. Please refer to the installation according to the actual situation.

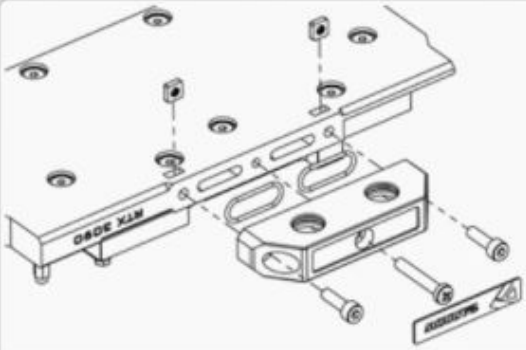

① Remove the original connector, and preserve the square nut well.

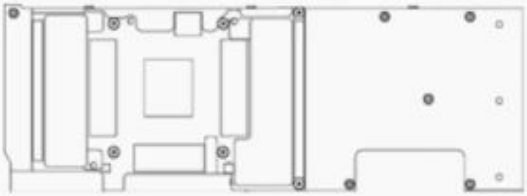

② Put silicone gasket on the corresponding position of the water block and apply silicone grease.

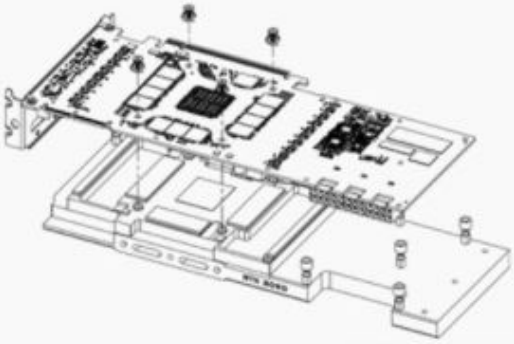

③ Install the black gasket on the copper column of the water block acrylic cover and secure the GPU with the spring screw shown in the illustration.

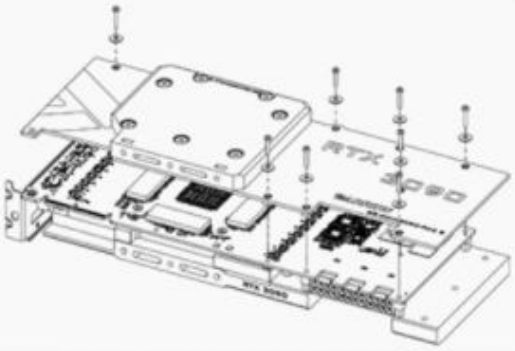

④ Paste the silicone gasket on the back of the GPU RAM and fix the water-cooled backboard as shown in the illustration.

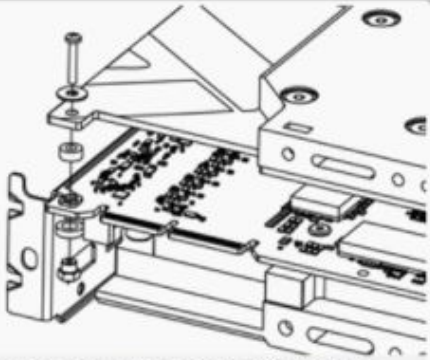

⑤ Fix the water-cooled backboard and the GPU's original baffle by using the accessories included in the order shown in the illustration.

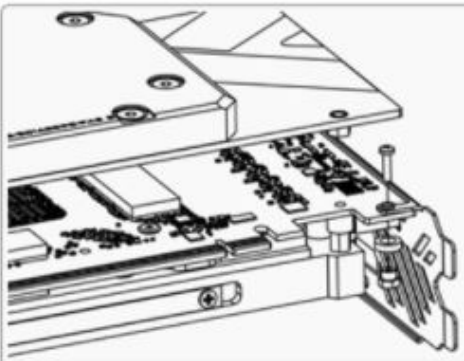

⑥ Fix the GPU's original baffle with the accessory in the order shown in the illustration.

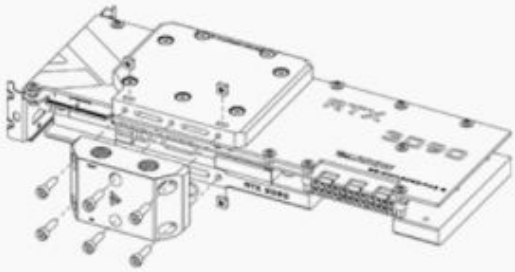

⑦ Put the gasket ring into the connector and install the connector as shown in the illustration.

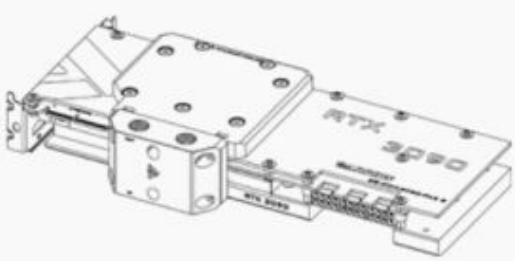

⑧ The installation is complete

GPU water-cooled backboard is an optional sales accessories which functions with the water block.

Additional Information

Brand	Barrow
SKU	BS-ASS3090-PA-B
Weight	1.5000
Color	Black
Vga	ASUS® ROG Strix RTX 3080 and 3090
Block GPU Type	Nvidia
Block Style	Copper-Plexi
Vendor SKU/EAN	6937826615351
Special Price	$49.96