Performance-PCs.com

1701 R. J. Conlan Blvd.
NE, Unit #5
Palm Bay, FL 32905, USA

Toll Free: 888-381-8222

www.performance-pcs.com
sales@performance-pcs.com

Like Us Facebook
See Our Instagram
Follow Us Twitter
Watch Our YouTube

Barrowch M2 Hard Disk Water Block - Acrylic Edition - Black

$29.95

Product Images

Short Description

This is a new professional, high efficiency M.2 Solid State waterblock from Barrowch. The block core is brass with highly shiny electroplated nickel surface. The block top is cnc'ed from aluminum alloy to enhance the texture. This waterblock provides extreme thermal heat conductivity and is suitable for 2280/22110 specificatopn type solid state drive. This waterblock will cool single or double sided chips and is very easy to install using double sided thermal conductive tape.

Description

This is a new professional, high efficiency M.2 Solid State waterblock from Barrowch. The block core is brass with highly shiny electroplated nickel surface. The block top is cnc'ed from aluminum alloy to enhance the texture. This waterblock provides extreme thermal heat conductivity and is suitable for 2280/22110 specificatopn type solid state drive. This waterblock will cool single or double sided chips and is very easy to install using double sided thermal conductive tape.

Cool · High efficiency · Heat sinking · Professional

M2 solid-state Hard disk water block

Suitable for 2280/ 22110 specification M2 type hard disk

FBM2280-PA

Create originality optimization and upgrading, Unique new experience

All-surround heat dissipation | Brass material tops | Ultra strong compatibility | Easy to install | Support hard disk with single/double side chip

Multiple versions available

多版本可选

Water block tops adopt the different matching for different use environment.

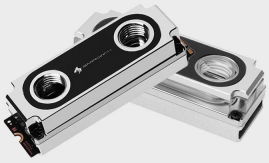

Super fast heat conduction rate

超高导热速率

Water blocks adopt high thermal conductivity brass as material, coolant can rapid heat absorption.

Multi specification hard disk support

多规格硬盘支持

Support multi specification M2 type hard disk

22110 | 2280

All round heat dissipation

全包围式散热

It can conduct and dissipate heat from double sided chip of M2 hard disk.

Top cover is brass nickel plated

黄铜镀镍上盖

The surface add nickel plating process,not only increase the service life and the excellent appearance, but also do not effect on heat dissipation efficiency.

The top cover is processed integrally by CNC aluminum alloy, brass material adopt electroplating process and it can keep bright color after long time.

CNC process

CNC 加工

The top cover is processed integrally by CNC aluminum alloy, enhance texture.

Features

Install tutorial

安装教程

1.Remove the label on the hard disk drive to prevent poor heat dissipation

2.Paste thermal grease to one side of the hard disk

3.Slowly push the hard disk into the heat sink
(Please notice the connecting finger and the fixed gap need to stay outside of the slot)

4.Paste thermal grease on the other side
(In the case of a hard disk with a chip on both sides, select one side to apply the 0.5mm gray gasket.)

5.Install the red position screws in the picture, the installation is complete

Specifications

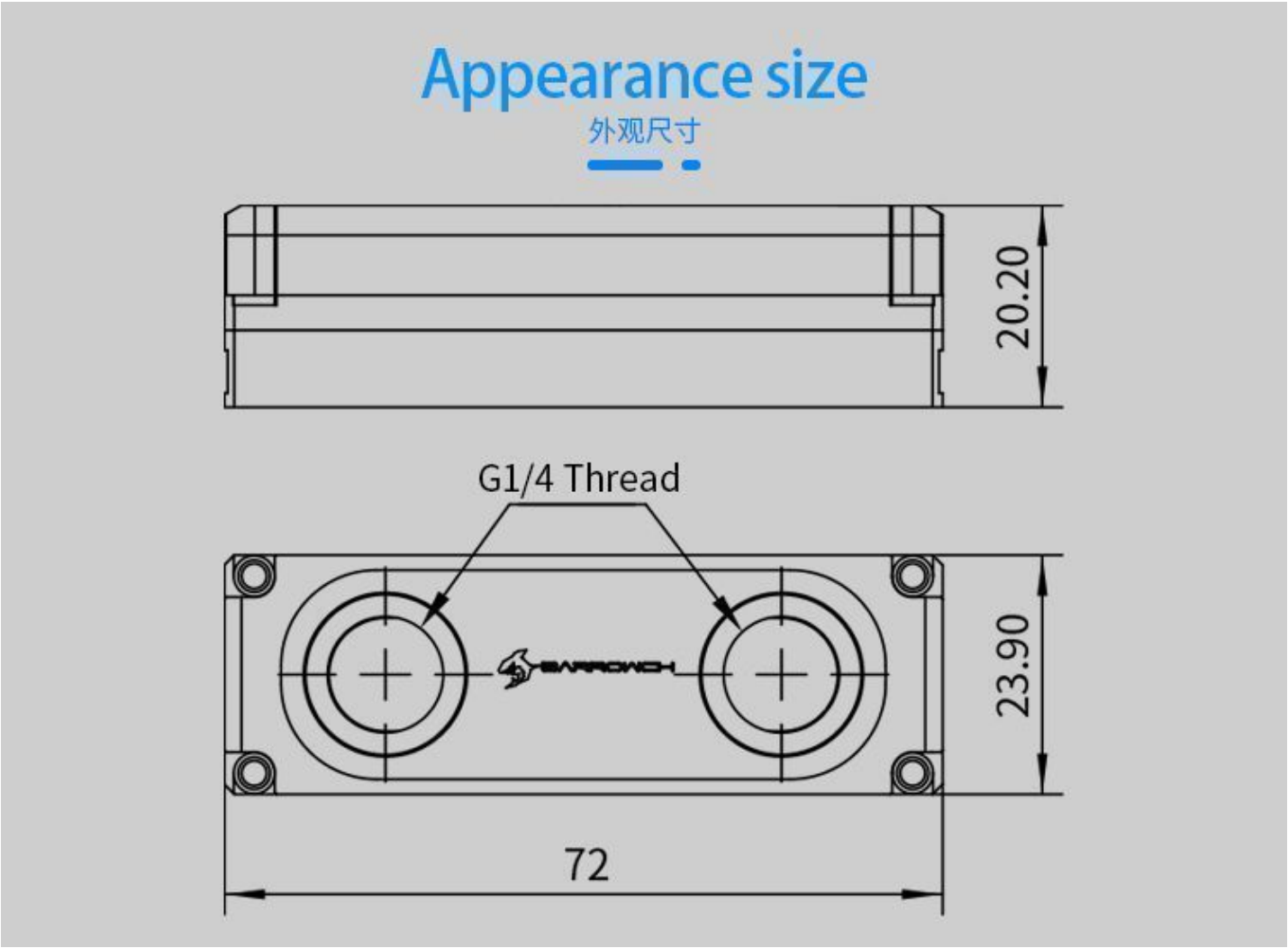

Additional Information

Brand	Barrowch
SKU	FBM2280Y-PA-BK
Weight	0.4000
Color	Chrome
Block Style	Nickel-Brass