Performance-PCs.com

1701 R. J. Conlan Blvd.
NE, Unit #5
Palm Bay, FL 32905, USA

Toll Free: 888-381-8222

www.performance-pcs.com
sales@performance-pcs.com

Like Us Facebook
See Our Instagram
Follow Us Twitter
Watch Our YouTube

Lamptron LED Indicator - Prominent - Silver - Orange

Special Price
$5.57 was
$7.95

Product Images

Short Description

This premium LED indicator from Lamptron is the perfect compliment for those that only want the best LED installation for their case. This is easy to install by drilling a single 8mm hole.

Description

This premium LED indicator from Lamptron is the perfect compliment for those that only want the best LED installation for their case. This is easy to install by drilling a single 8mm hole.

Manufactured from marine grade Aluminum Lamptron's extensive range of indicator LED's are designed for use in potentially hostile environments, such as access control applications or, in the case of modders, using these LED's for Power on, HDD activity or other custom indicating functions. LED price is for bare tails. You can also optionally select for us to add wire to 24", crimp 1x1 KK headers, and sleeve your cable in choice of colors. This makes for quick and clean installation!

Features

- Flying Lead Termination
- Sealed to IP66
- Blue, red, green, amber, UV, white and blue LED illumination choices!
- Wide viewing angle
- Aluminum and Black Anodized aluminum body

Specifications

- Flying leads
- Forward Voltage 3.0-3.3V
- Forward Current: 25-30mA
- Power Dissipation: 100-120mW
- LED Luminosity: Green 200mcd, amber 400mcd, orange 1200mcd, blue 1600mcd, UV 800mcd, red 2000mcd, white 3000mcd
- Operating Temperature: -40°- 80°C
- Materials: Body and Nut -Aluminum, steel washer, Polycarbonate, O-ring-Silicon

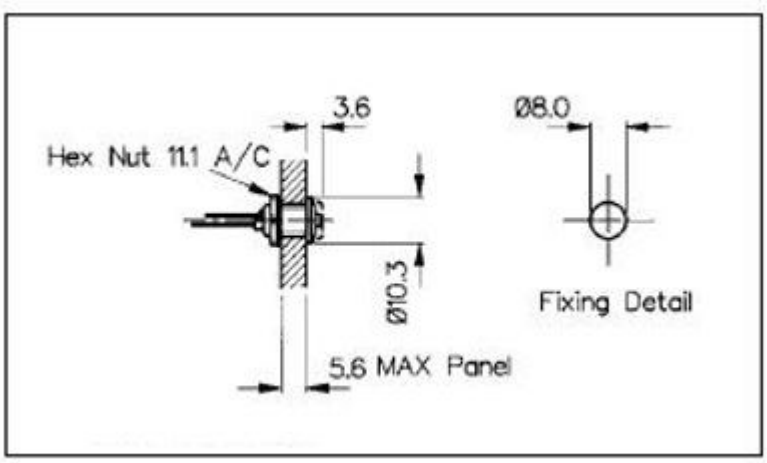

NOTE: LED's are rated for up to 3.5 Volts and the motherboard LED headers are 3.3V. This is acceptable.

All LED indicators are tested in house before shipment. Absolutely NO returns of Indicators that have a burnt out LED!

Additional Information

Brand	Lamptron
SKU	MTM-IND-PRO-SL-OR-D
Weight	0.1000
Color	Silver
Lighting Type	LED Bulb
LED Color	Orange
Special Price	$5.57